265 | PADLOCKABLE CABINET LOCK

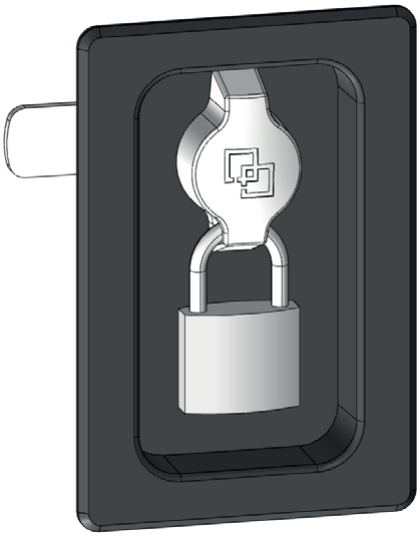

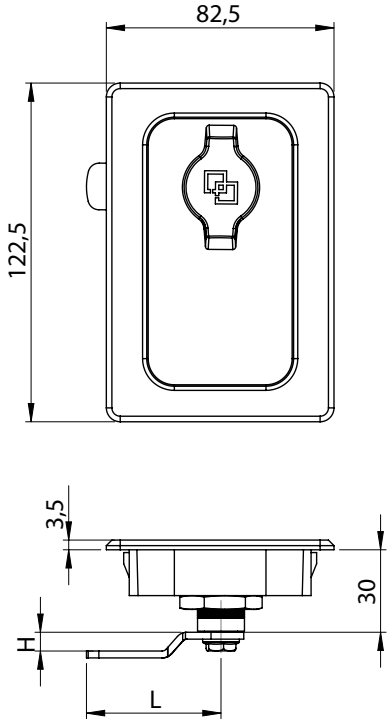

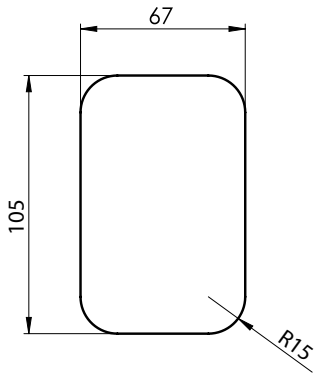

Cutout

CAM LOCKS

Material	Code
Base: Polyamide, black Handle: Zamak 5, chrome Cam: Steel	265-11

* All dimensions are in mm
* The cams to be ordered seperately